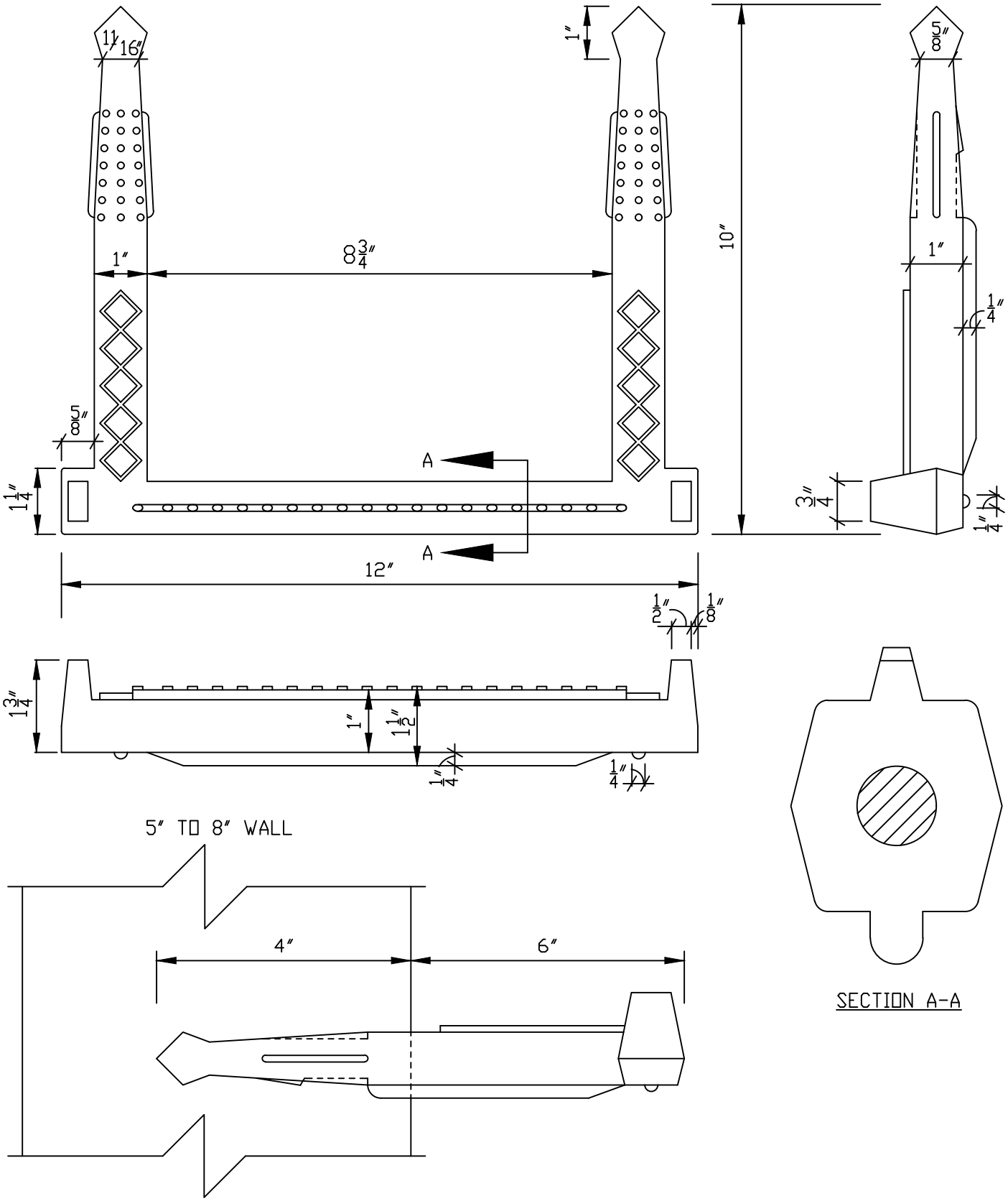


| | |
|---|---|
| CITY OF SALISBURY, N.C. STANDARD DETAIL | DATE: JANUARY 1, 1991 |
| SEWER SYSTEMS<br>PLASTIC MANHOLE STEP | NOT TO SCALE |
| | STANDARD SS-7 |