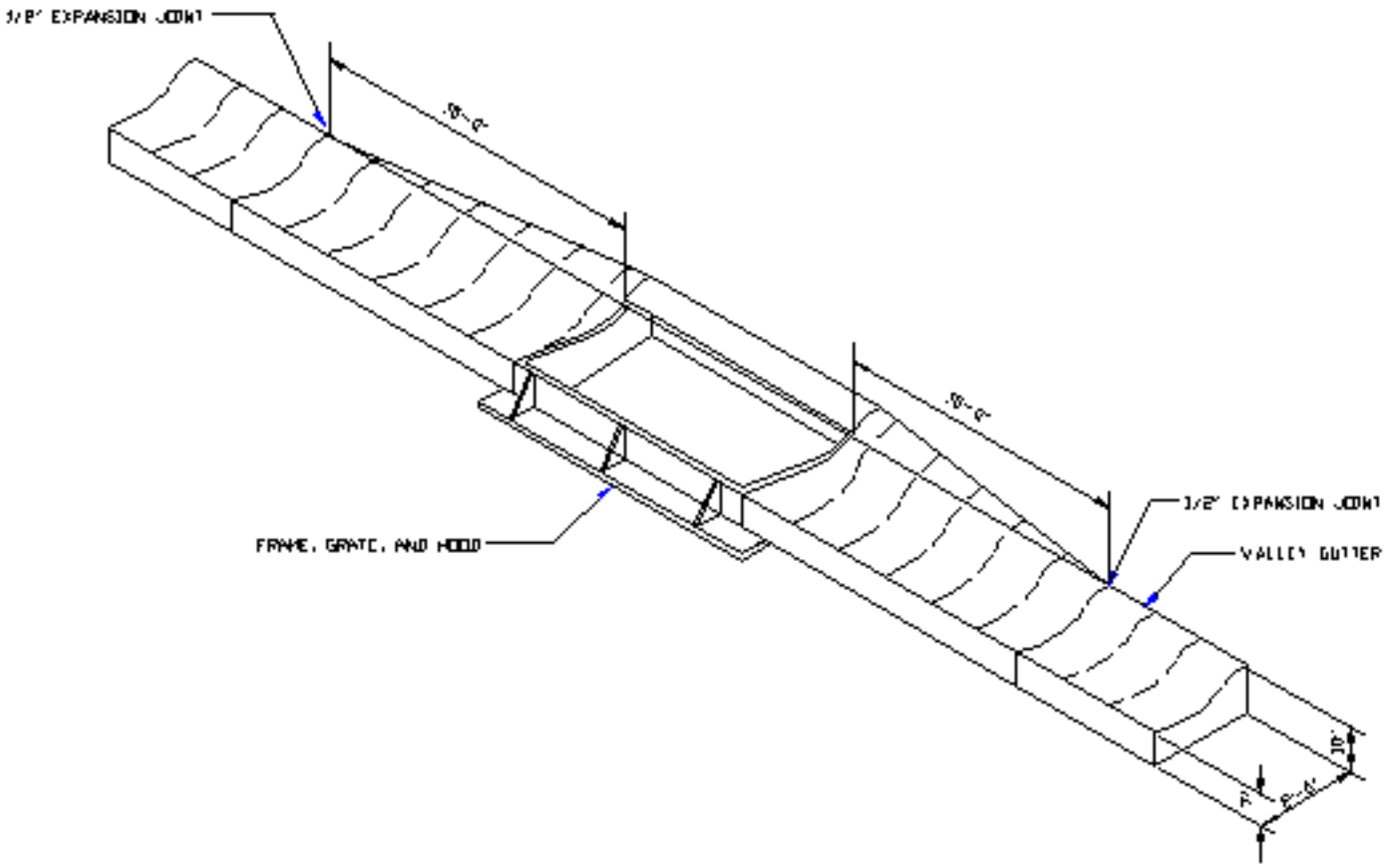

CITY OF SALISBURY, N.C. STANDARD DETAIL	DATE: JULY 1, 1991
STORM DRAINAGE CATCH BASIN IN VALLEY GUTTER	SCALE: NOT TO SCALE
	STANDARD SD-8